US-492
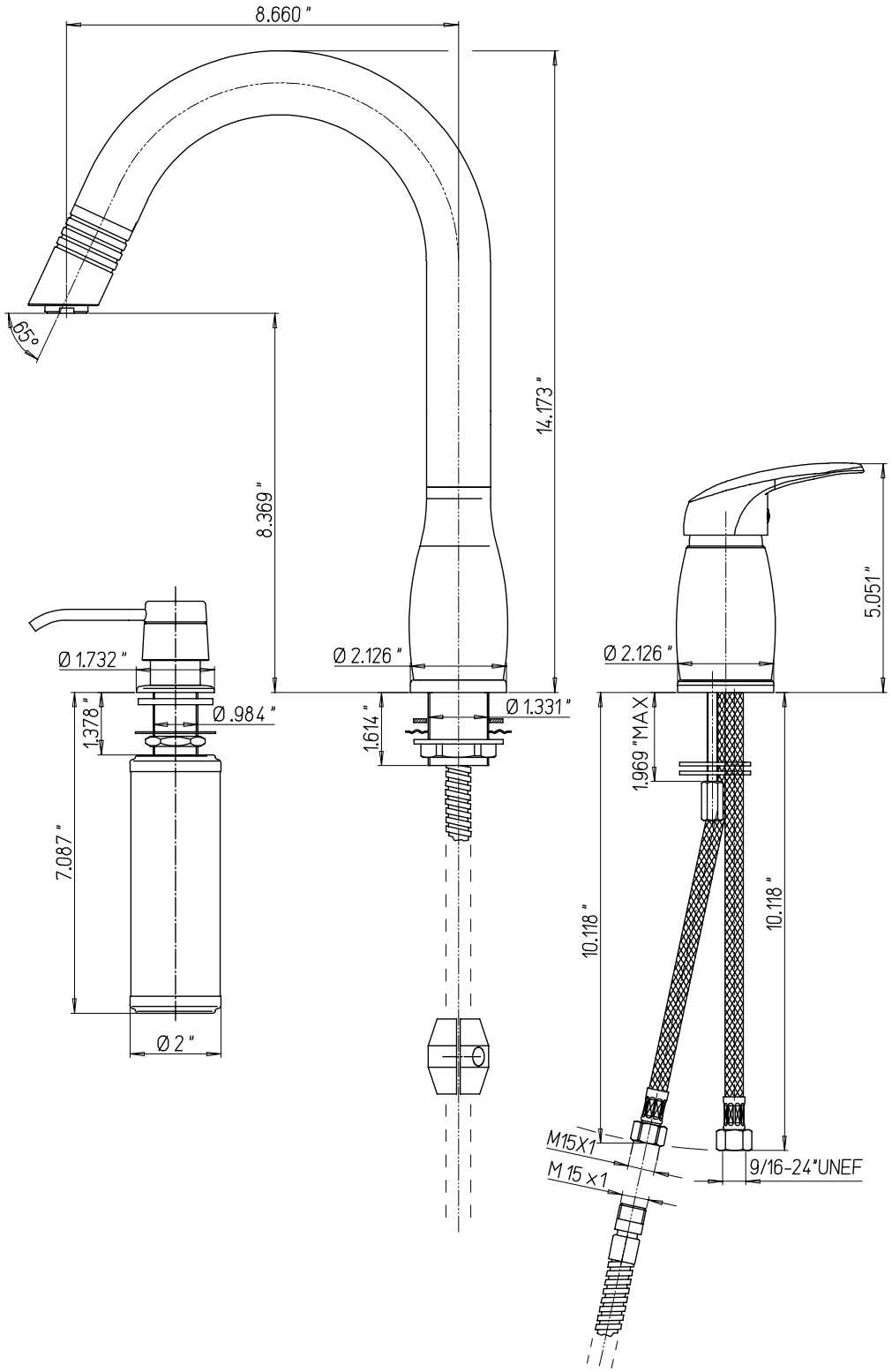
STANDARD FINISHES:
Polished chrome
Satin Nickel PVD